3 603 C2A 040
Issue ~~09-11~~
Stand 10-03-01

Fig./Abb. 1

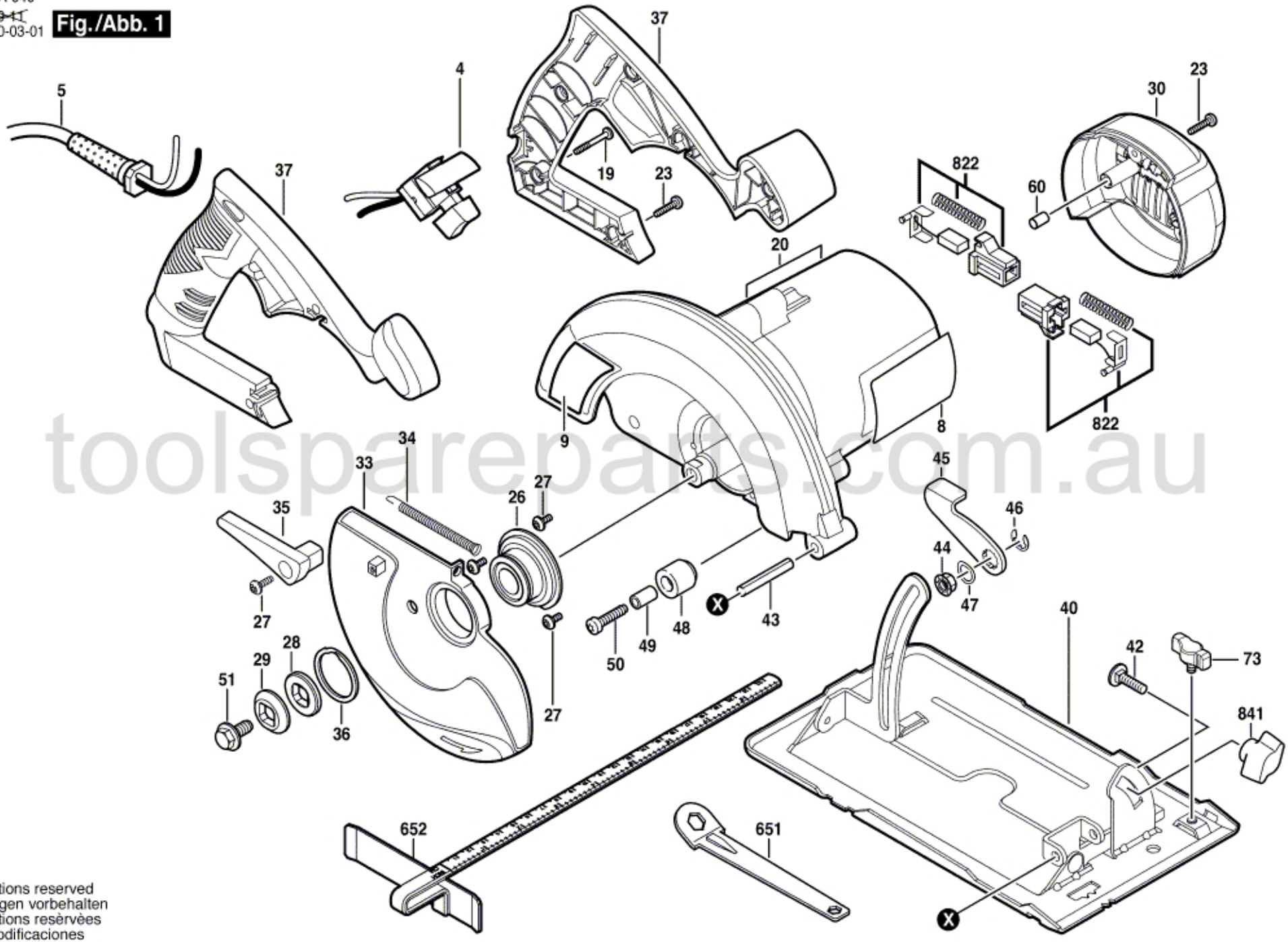

toolsparepart.com.au

Modifications reserved
Änderungen vorbehalten
Modifications resèrvèes
Salvo modificaciones